Instruction manual

SUBMERSE

YD-25A3GWS1

Ver.20240911

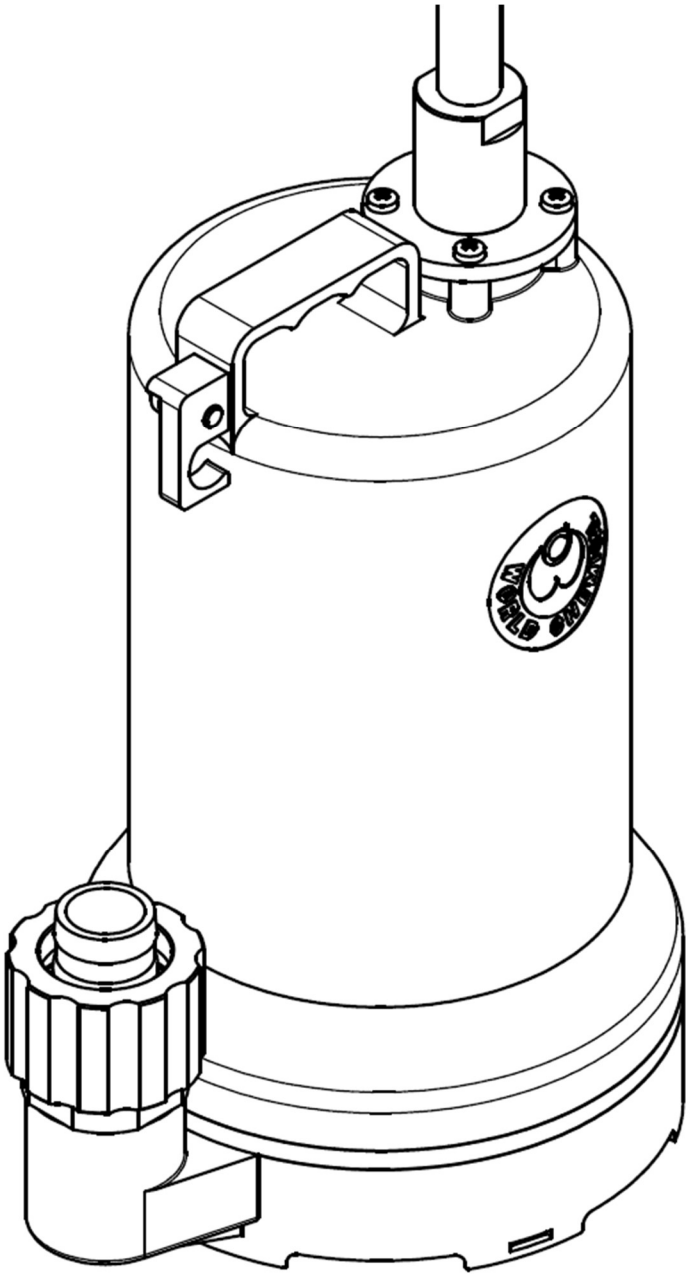

World Chemical Co.,Ltd.

Preface

Thank you for purchasing our submersible pump “SUBMERSE”.
In order to use the "YD-25A3GWS1: submersible pump", correct operation and regular maintenance in accordance with the contents of this instruction manual are essential.
Please be sure to fully understand the safety precautions listed in the instruction manual before using this product.
We recommend working while this instruction manual is kept handy.
Furthermore, we cannot have responsibility for any accidents caused by usage not specified in this instruction manual. If any safety measures are required, contact us or the company of purchase.
The specifications and contents of this product and instruction manual are subject to change without prior notice due to improvements, design changes, etc. Thank you for your understanding in advance.

Table of contents

1. Safety precautions (To be observed.)

The following procedures are intended to protect you from personal injury and/or property damage.

- The following symbols classify the degree of danger and explain the damages that could occur when its contents are ignored or the pump is used improperly.
- Safety rules to be observed are classified and explained under the following symbols. (The following are examples of picture displays)

Below is an example of symbols.

⚠ **Warning**	Non-compliance can lead to fatal or serious injury.
⚠ **Caution**	Non-compliance can lead to some injury and/or property damage.

⚠	This symbol cautions people to be careful.
⃠	This symbol signifies that this action must not be taken.
❗	This symbol indicates that the action must be taken.

⚠ Warning

① Dangerous liquids and surroundings.

When using the pump for dangerous liquids or in surroundings, adhere to facility standards determined by law and conduct daily check to prevent leakage. If the pump under abnormal conditions, such as liquid leakage, is used, it may cause serious accidents such as explosion or fire and personal injury. Regarding handing liquid, follow the liquid manufacturer.

Never use the pump for flammable gas or flammable liquid. Furthermore, do not place flammable gas or flammable liquids nearby. (An explosion-proof motor is not used.)

When handling chemical liquids, wear protective equipment such as safety glasses, protective gloves, and rubber boots, as well as protective clothing.

If the chemical liquid comes into contact with your skin, immediately wash it with plenty of clean water and seek medical advice.

If chemical liquid comes into contact with your eyes, immediately rinse your eyes with plenty of clean water with your eyelids open and seek immediate medical attention from an ophthalmologist.

② Do not use damaged or modified pumps.

Using the damaged or modified pumps may cause fatal accident, electric shock or pump damage. Do not use these pumps as this is not covered by our warranty.

③ Caution when transporting or lifting the pump.

Always use the hoist belt for pumps that come with them. When pumps do not have hoist belts, lift them with bolt slings while watching the weight balance. It should be performed by qualified personnel with enough strong slings. Refrain from carrying the pump in your hand as this may lead to an accident.

④ Do not operate pumps with power on.

Do not inspect or disassemble the pumps or motors with the power on. It may lead to personal injuries such as electric shock or getting caught in the rotor. Operate it with multiple safety devices such as the switch for main power supply, the operation switch, and the hand switch for the pump.

⑤ Connecting earth cable.

Using the pump without connecting earth cable to the motor may cause electric shock. Connect it by qualified personnel under the electric facilities' technical standards and interior wiring regulations.

⑥ Protect power supply cord.

Over-stretching, pinching and damaging power supply cords or motor lead wires may cause fire or electric shock to damage it.

⑦ Install Current Leak Circuit Breaker.

The operation without a current leak circuit breaker may cause electric shock. Install it or an over current protection device and prevent electric accidents or pumps damage.

⚠ ⑧ Caution when removing pump.

When removing the pump from piping, make sure to close valves on the suction/discharge piping and check no liquid leakage. Direct contact with liquid may be harmful and wear protective gear when performing operation.

⚠ ⑨ Maintenance

When maintaining, inspecting or repairing equipment, turn off the circuit breaker for the primary power supply, clearly display the "Work in Progress" sign, and be sure to avoid accidentally turning on the power and causing personal injury.

When working with multiple people, by calling out each other be especially careful not to reset the circuit breaker by mistake.

To prevent electric shock, do not touch electrical equipment, wiring, switches, etc. with wet hands or clothing. This is extremely dangerous as it may result in personal injury or equipment failure, damage, or trouble.

⚠ Caution

① Unspecified use.

Do not use pumps for purposes other than specification in the spec sheet or nameplate. Especially, check the motor specification (phase, voltage and frequency) and connect them. Unspecified use may cause personal injuries, the pump or peripheral equipment damage.

② Restrictions of operator.

Transportation, installation, wiring, operation, servicing, and inspection should be performed by qualified personnel who have full knowledge on the handling the pump.

③ Caution when opening package.

Open the package after checking upside down of the pump. When opening a wooden crate, be careful of nails and silvers to get the pump out without hurting you.

④ Repairs and returning the pump.

When repairing damaged pumps, contact us or your supplier of purchase. At the time of sending pumps back by express, wash the interior and exterior with fresh water and check it without liquid. Then, wrap it with a plastic bag.

⑤ Plastic (resin) parts.

The pump is made of plastic and strong impact may cause damage and result in personal injury. Do not hit and get on the top of the pump. Also attach piping supports not to apply any pipe load to the pump.

This pump is made from general-purpose plastic. Unlike metals, compressive strength depends on temperature. Therefore, pay attention to the allowable pressure when using at high temperatures.

Component part : Carbon fiber reinforced polypropylene / Alumina ceramics / PTFE

O-ring : FPM（Fluoro-rubber）/EPDM

Use the pump with liquids that can be used with the above materials.

The chemical resistance of a material is greatly influenced by the type, concentration, temperature of the liquid, interaction of multiple liquid, stress applied to the material, the time it is in contact with the liquid and various other conditions, either singly or in interaction. Therefore, we cannot guarantee chemical resistance.

Before use, conduct a chemical resistance test of each material under the conditions of use as much as possible to confirm chemical resistance.

Deterioration over time surely occur due to the environment of the installation site, etc. In order to use the pump with safe for a long time, perform daily inspections and take early action (including replacing parts).

⑥ Pump starting

Avoid the pump dry running. The impeller bearing and shaft may become stuck due to frictional heat, or the thermoplastic resin molded parts may melt, causing fluid leakage or malfunction.

⑦ Pump operation

Do not perform intermittent operation that repeatedly starts and stops at intervals of several seconds. This pump is not designed for intermittent operation. For continuous operation.

Fluctuations in the load inside the pump cause liquid leakage from the joints of parts and fatigue failure of the material. Also, do not perform intermittent operation that the discharge piping valve is repeatedly opened and closed at intervals of several seconds during continuous operation.

⑧ Disposing of scrapped pump.

When disposing scrapped pumps, remove adherent liquid and discard it as industrial waste in law.

⑨ Outflow protection

Just in case liquid leaks to break the pump or pipes, make sure to take appropriate preventative measures.

⑩ Liquid used

When using the pump in a particularly harmful tank such as a cyanide bath, take sufficient safety measures by installing protective measures and a tray in case the liquid spills. Install equipment that can respond to sudden accidents.

Install a liquid level control gauge and a device that will stop the motor and fully close the piping valves at the same time as alarm sounds when the liquid level drops.

The impeller incorporates magnets, so do not use liquids containing iron powder or slurry/sludge as parts wear out and damage.

Temperature range of liquid used:	From 5 to 40 degrees
Viscosity range of liquid used:	Less than 30mPa･s (20 degrees, S.G. 1.0)

⑪ Pump disassembly

Do not disassemble the motor section (including cables).

Using the pump after disassembling and reassembling by yourself may not be covered by our warranty, so refrain from disassembling the pump as much as possible.

When overhauling the motor, contact the supplier of purchase or us.

2. Model description / Specification

YD－25A3GWS1－CP－F □ □ 2

① ② ③ ④ ⑤ ⑥ ⑦ ⑧

1. Discharge outlet
   25 : 25A equivalent
2. Motor power and voltage
   A3 : Single phase, 100V, 160W
3. Pump model
   GWS1: Submersible pump
4. Main material
   CP: Carbon fiber reinforce polypropylene (CFR PP)
5. Bearing material
   F : PTFE
6. O-ring material
   D : FPM (Fluoro-rubber)
   E : EPDM
7. Frequency
   5 : 50Hz
   6 : 60Hz
8. Maximum specific gravity of liquid
   2 : S.G. 1.2

[Standard performance]

Model	Freq. (Hz)	S.G.	Std. performance		Motor spec.			Weight	Temp. range of liquid
			THD	Capacity	Output	Volt., Ph	Ins.		
YD-25A3GWS1-CP-F□52	50	1.2	4m	50L/min	160W	100V Single phase	E	6.6Kg	5～40℃
YD-25A3GWS1-CP-F□62	60		4.5m						

[Notice]

- The standard performance in the table is the performance in fresh water (specific gravity 1.0) at 20℃.
- Minimum required flow rate during pump operation: 5 L/min
- Applicable hose diameter: Inner 25 mm × Outer 33 mm
- Minimum liquid level for continuous operation: 244 mm
- Minimum operational liquid level: 40 mm
- Continuous operation time: 8 hours

3. Outline dimension / Parts structure

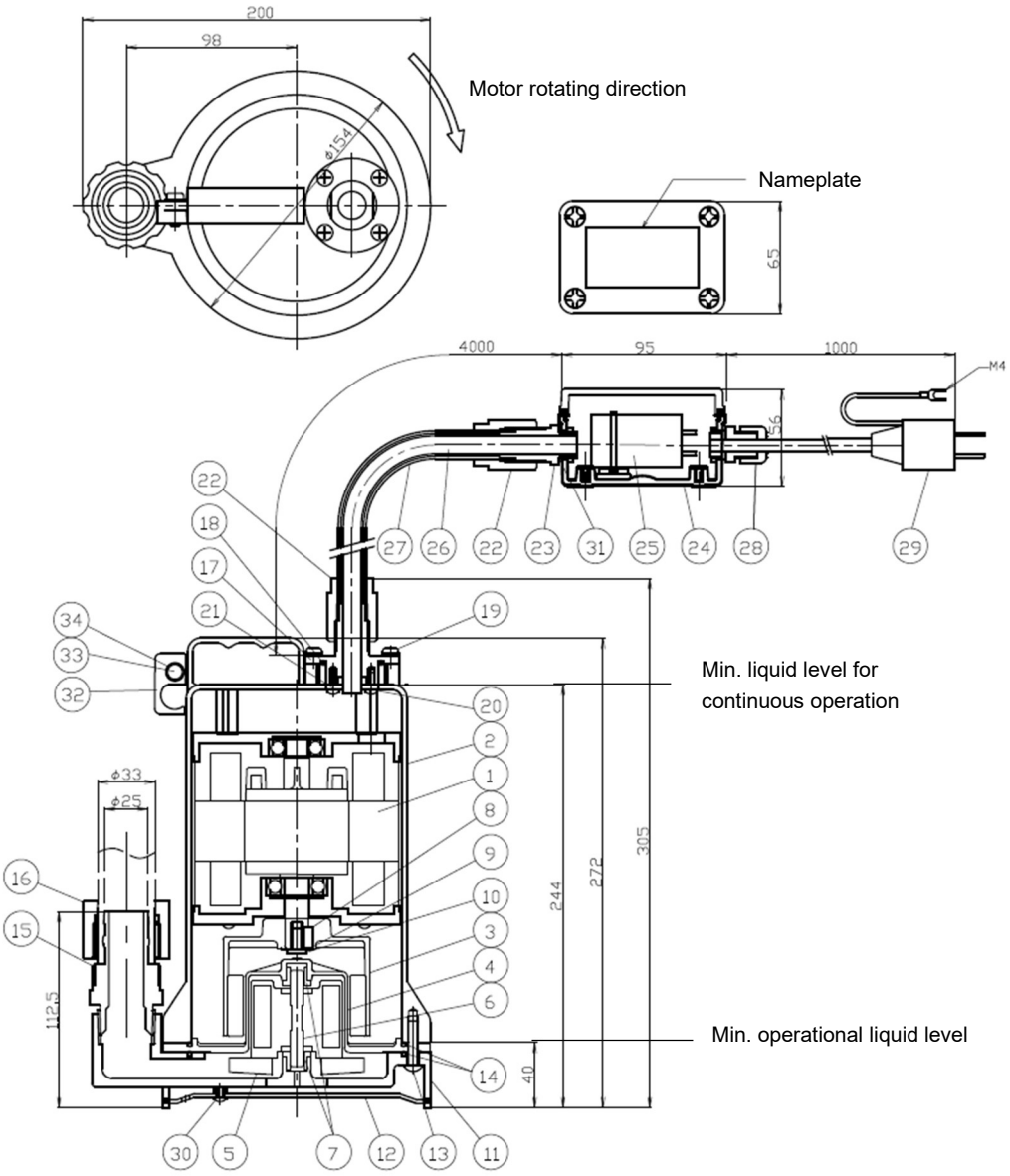

No	Parts name	Material
1	Motor	FC
2	Motor cover	CFR PP
3	Outer magnet	Ferrite
4	Rear casing	CFR PP
5	Impeller	PP, Ferrite
6	Shaft	Alumina ceramics
7	Bearing	PTFE
8	Key (One side round 5×5×12)	SUS304
9	Flat washer (Outer magnet) φ18×φ6×t1	SUS304
10	Low head bolt (Outer magnet) (M6×12)	SCM435
11	Casing	CFR PP
12	Strainer	CFR PP
13	Pan head bolt (Casing) (M6×25)	GFR PPS
14	O-ring for casing (AS568-158)	FPM/EPDM
15	Hose joint	PP
16	Hose nut	PP
17	Cable connector B	PP

No	Parts name	Material
18	O-ring for cable connector B (AS568-123)	FPM/EPDM
19	Pan head bolt (Cable connector B) (M5×12)	GFR PPS
20	Pan head bolt (Locking cable connector B) (M4×10)	SUS304
21	Locking cable connector B	PP
22	Electric wire nut	PP
23	Cable connector A	PP
24	Pull box IP65	ABS
25	Condenser	SS
26	2PNCT cable	CR
27	Transparent vinyl hose for cable	S-PVC
28	Cable grand	PA66 NBR
29	Code with plug	S-VCTF
30	Pan head bolt (Strainer) (M4×6)	GFR PPS
31	O-ring for cable connector A (AS568-015)	NBR
32	Cable base	HT-PVC
33	Pan head bolt for cable base	GFR PPS
34	PTFE collar (φ6×φ7 L6)	PTFE

4. Hose connection / Installation

1. Hose connection

- Insert a hose nut into a hose.
- Insert the hose into a hose joint and tighten the hose nut until 3 mm.

Notes:

- Check to use the correct size hose: inner 25mm x outer 33mm.
- When tightening the hose, securely fix the hose nut to the hose joint by applying sufficient force.
- Hoses with metal wires have low flexibility and are difficult to handle. This makes it difficult to tighten properly and may damage the connected parts, so it is not recommended for use.

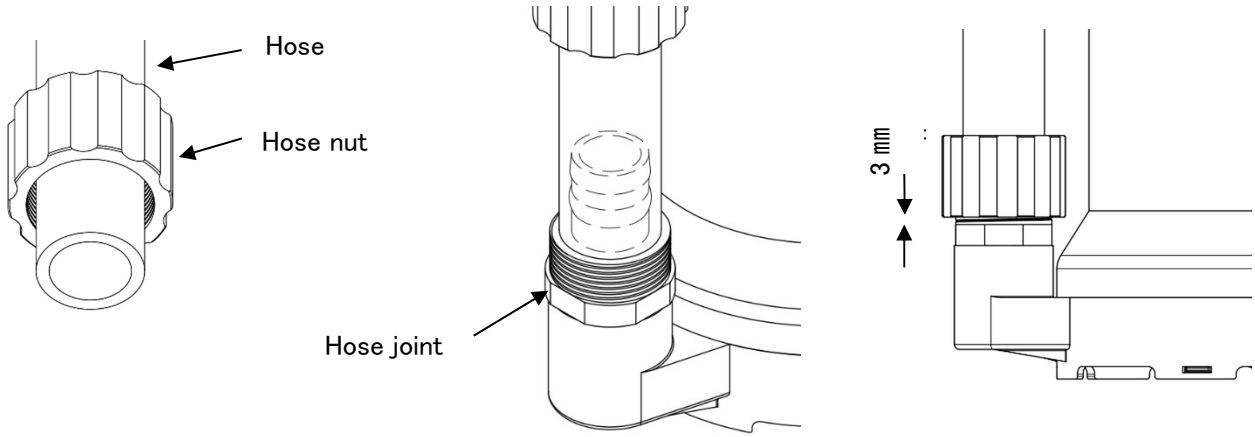

2. Pump installation

- Tie a PP rope to the handle and place it in the liquid. Place the pump completely submerged in liquid on a flat surface.

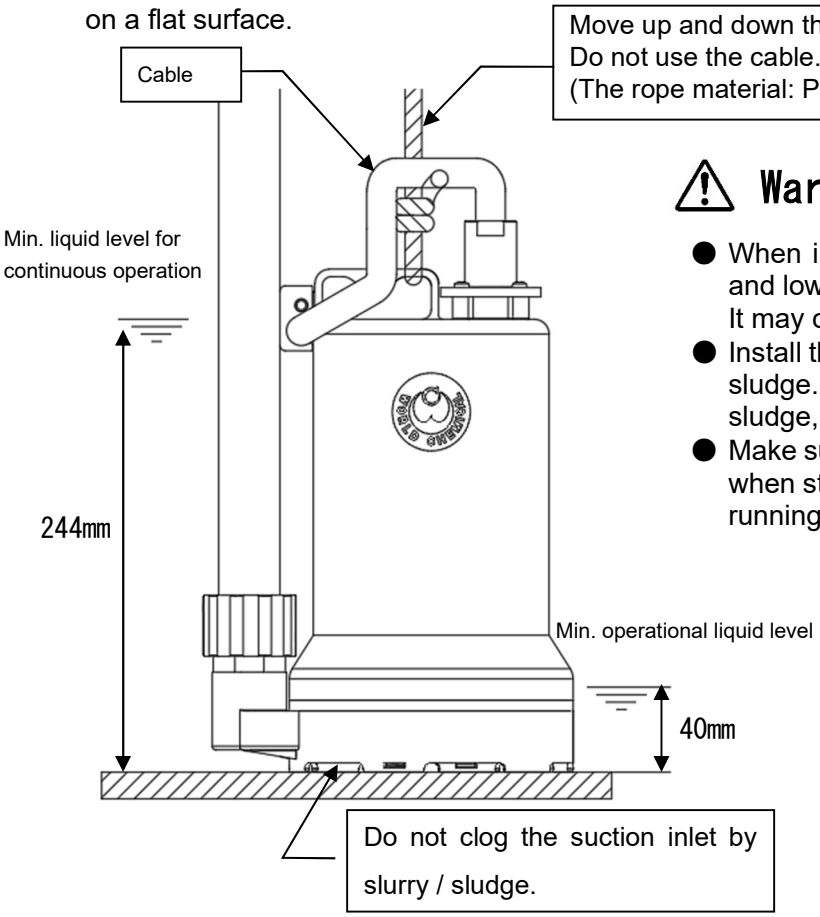

⚠ Warning

- When installing, use the attached rope to raise and lower the pump. Do not use the power cord. It may cause electrical leakage.
- Install the pump in a location free from slurry and sludge. If the suction inlet is clogged by slurry / sludge, it may cause malfunction.
- Make sure that the liquid level is 40 mm or more when starting the pump. If not, it may cause dry running and damage the pump.

5. Power and motor connection

1. Connect the earth terminal to the earth wire.
2. Plug in 100V.
3. The pump starts working and liquid comes out of the hose. Be careful not to bend the hose.

⚠ Warning

- Install an earth leakage breaker to prevent electric shock.
  （Electrical equipment technical standards Article 41）
- When connecting, maintaining, inspecting, or repairing the power supply and pump, turn off the circuit breaker connected to the wiring, clearly display the "Work in progress" sign and make sure that the power is not accidentally turned on, resulting in personal injury. please.
  If multiple people are working together, be sure to talk to each other to ensure not to accidentally resstart the circuit breaker.
- Make sure to connect the earth wire of the pump.
  Use the tab terminal of the plug for the earth wire.
- Follow the instructions of the chief electrical engineer when setting the variable sensitivity current type earth leakage breaker.
  Increase or decrease in sensitivity current conflicts with electric shock protection and equipment insulation resistance.
  （Related laws and regulations: Electricity Business Law, Electrical Equipment Technical Standards
- To prevent electric shock, do not touch electrical equipment, wiring, switches with wet hands.
- Periodically inspect and maintain the motor wiring terminals on the power panel to make sure they are not burnt or discolored due to heat generation.
  If the terminal is loose, there is a risk of burnout or fire due to heat generation.
  This work should be performed by the chief electrical engineer.

6. Check after operation

⚠ Caution

- After operation, check for liquid leakage, the operating sound of the pump and motor, and the liquid discharge condition.
  If an abnormality is discovered, immediately stop the equipment and take measures.
- At the time of a power outage or power failure, turn each power switch OFF, then turn it ON one by one after power is restored.

■ Minimum liquid level during operation

- Maintain the liquid level during operation that the entire pump is submerged in the liquid.
  (Minimum operational liquid level: 244mm and more than the bottom of the pump installation.)
- Continuous operation below the minimum liquid level should be for less than 5 minutes and do not operate repeatedly in short periods.
  ※ Depending on the operating conditions, the built-in thermal protector may operate to protect the motor, causing the pump to stop. In such a case, stop operation for a while, check that there is no abnormality with the pump and ensure an appropriate liquid level before operating.
- The minimum liquid level at the pump start is 40 mm or more. (Minimum operational liquid level)
  ※ Depending on the liquid level, air may get mixed in even if the liquid level is above the operational level, making the operation fail.
  ※ If the pump is operated in the air, the rotating parts inside the pump may be damaged.

■ Measures against air lock

- If there pools of liquid in the middle of the discharge pipe when the pump is stopped, pumping failure may occur due to an air lock when the pump is restarted. In addition, the same phenomenon is likely to occur even after suction operation, so either install an air release valve on the discharge pipe or be sure to release the air before operation. Operate the pump after pouring the liquid used.
- When attaching a check valve in the middle of the discharge pipe, install a bypass pipe for air release at the bottom of the check valve (Air lock may occur if there is no air release pipe.).

7. Maintenance

1. Daily check

・ Be sure to perform a start-up inspection before operating the equipment.

Inspection details		Frequency	
		Daily	Once a month
1. Start-up inspection	1-1 Check of open/close operation of outlet valve handle.	◎	
	1-2 Check of piping deformation by liquid temperature.	◎	
	1-3 Check of liquid leakage from piping.	◎	◎
	1-4 Check of looseness of fixing bolts.		◎
	1-5 Check of insulation resistance.		
	1-6 Clean	◎	
2. Inspection during operation	2-1 Check of current value	◎	
	2-2 Check of discharge pressure	◎	

2. Periodical check

・ Perform periodic overhaul by the manufacturer for the smooth pump operation.

・ When changing the installation location or moving the pump during repairs, be sure to drain the liquid and rinse it completely with water to ensure safety.

※ Recommended period for overhaul: Perform every 12 months or every 10,000 hours, whichever comes first. However, if operating in an environment with slurry or sludge, perform every 12 months or every 1000 hours, whichever comes first.

3. Clean

・ If liquid does not come out easily by the strainer clogged, it may cause a malfunction. Remove dust using the following procedure.

・ Place the pump horizontally and sprinkle water on the strainer. If the dust cannot be taken out, remove the strainer and clean it.

【How to remove the strainer】

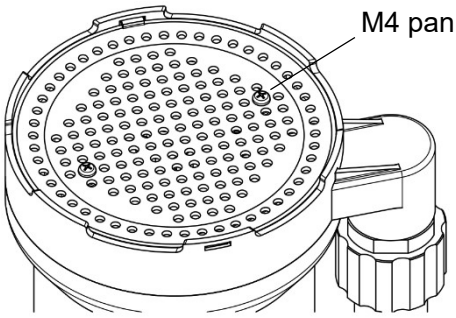

① Remover two M4 pan head bolt made of PPS.

② Press firmly on the black circle with your thumb.

③ There will be a gap at the location indicated by the arrow.

④ Insert a flat head screwdriver into the gap, lift the strainer up and remove the claws.

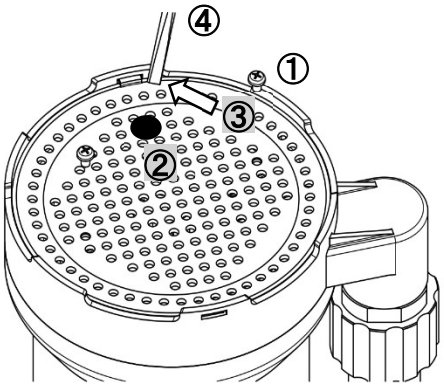

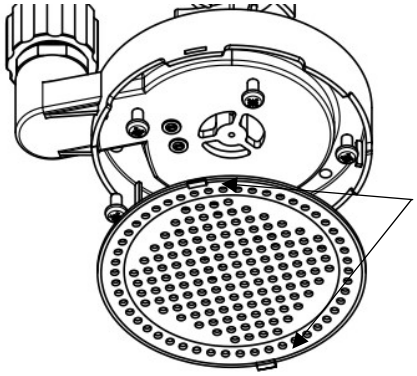

8. Assembly / Disassembly

※ Do not disassembly pumps/motors (including cable).

We conduct a pressure leakage test during assembly to confirm that no liquid will get inside.

Using the product after disassembling and reassembling by yourself may not be covered by our warranty, so refrain from disassembling the product as much as possible.

For pump overhaul, contact the supplier of purchase or us.

If disassembly is unavoidable:

[Disassembly]

A) Remove the strainer ⑫. Refer to the procedure in the page 11.

B) Remove the pan head bolts ⑬ made of PPS by using a plug screwdriver PH3 (tip size).
(Note: They are made of plastic, so if a screwdriver with a different tip shape is used, the screw groove will be damaged.

C) Remove the casing ⑪, take out the impeller ⑤.

D) Remove the rear casing ④.

※ Be careful not to get the chemical liquid on the metal parts, because the motor gets exposed.

※ Be careful not to allow dirt or foreign matter to adhere to the O-ring or sealing.

[Assembly]

A) Make sure the motor is dry, wipe the O-ring ⑭ clean, and set it up in the same way as when it is disassembled.

B) Tighten pan head bolts ⑬. Tighten the bolts in diagonal positions alternately.
The specified torque is 1.0N･m.

C) Install the strainer ⑫ and tighten pan head bolts ㉚.
The specified torque is 0.3N･m.

※ Be sure to tighten to the specified torque as if they are tightened with more than the specified torque, they break.。

■ Exploded view

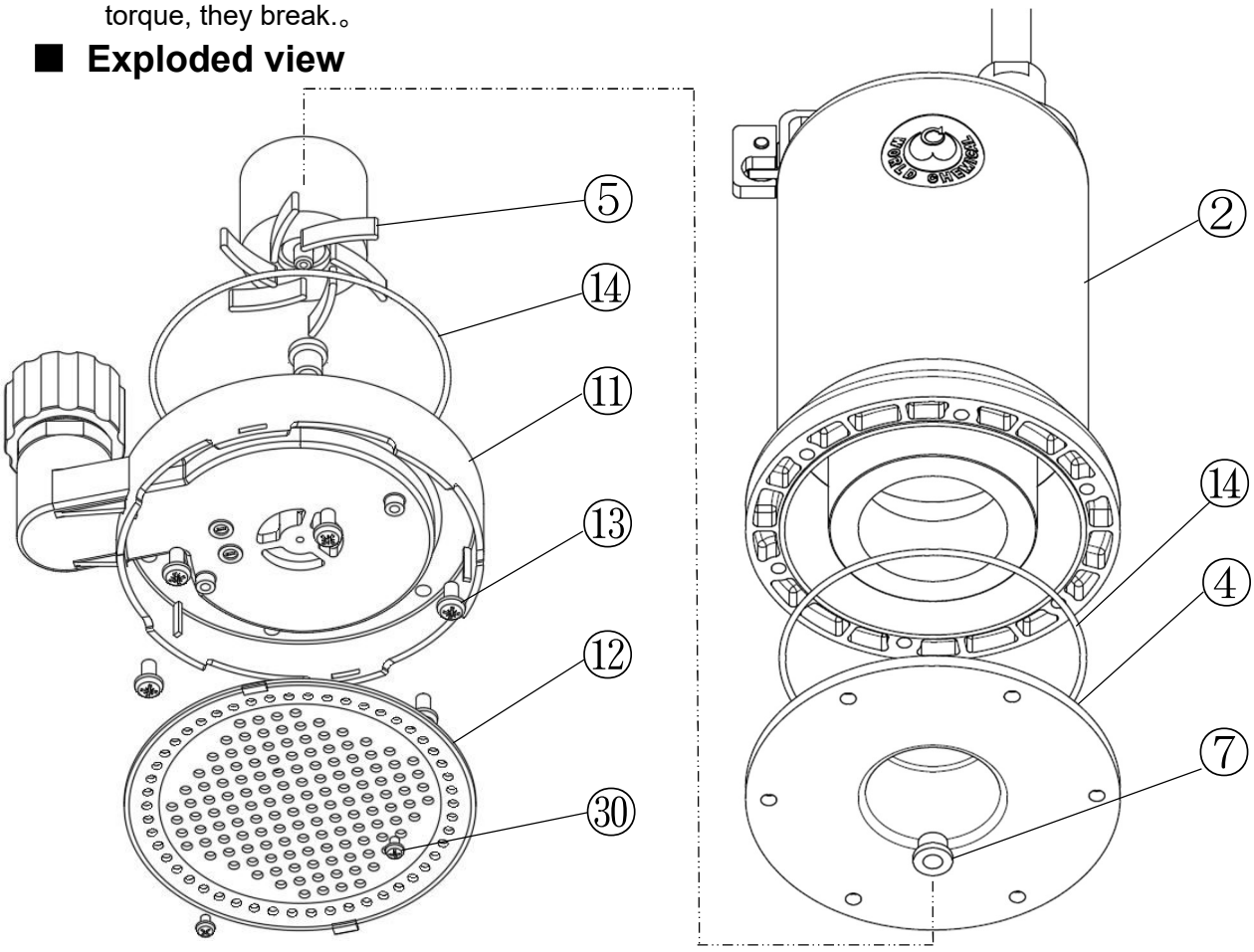

9. Troubleshooting

1. Unable pumping and insufficient capacity

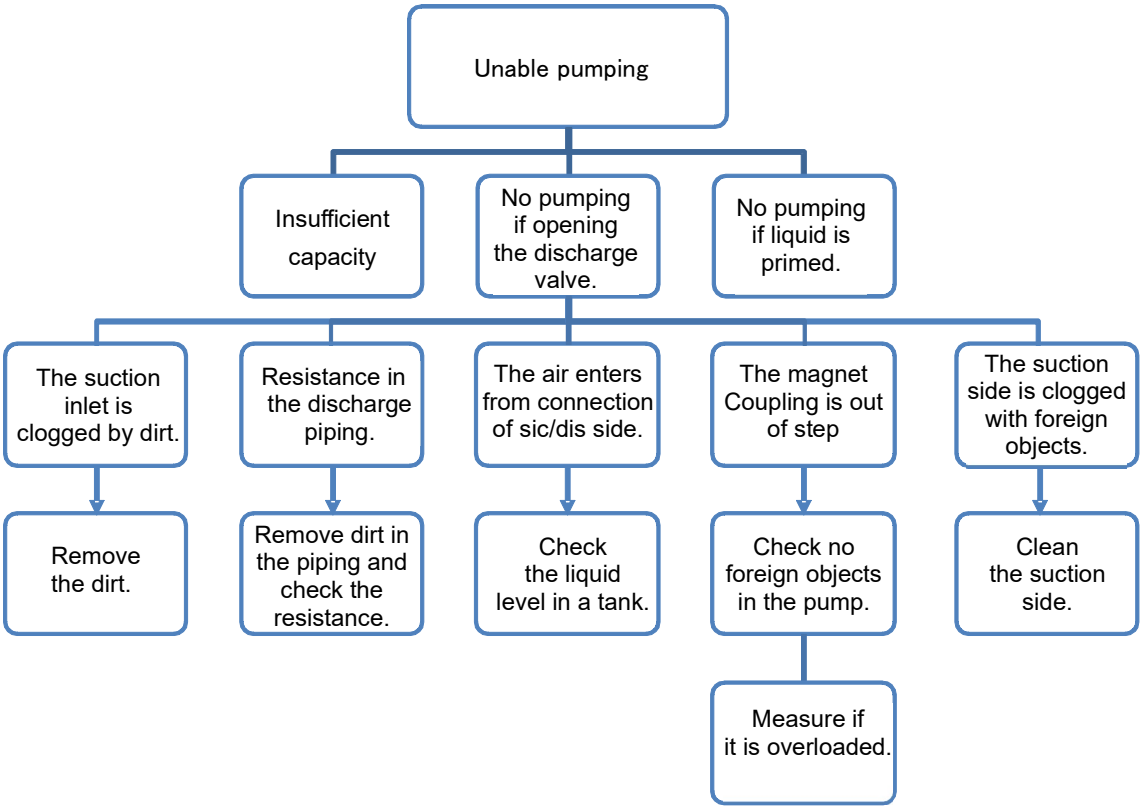

2. Pump vibrates.

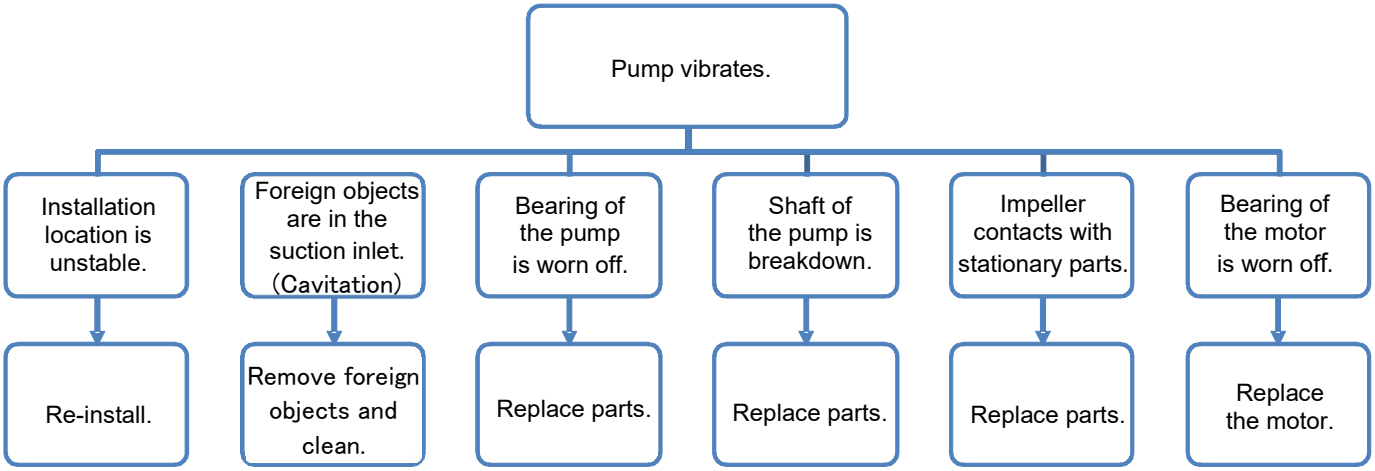

10. Warranty / Repair

1. The warranty period and range

① The warranty period is 12 months from the date dispatched from our factory.

② During the warranty period, when pumps break down caused by our manufacturing detects even if they are used under the condition instructed in this manual, the failed parts are repaired free of charge.

③ Basically, even if failure is within the warranty period, the following cases are charged.

- Failure and breakdown due to use or safekeeping different from the instructions in this manual.
- Failure and breakdown due to incorrect use or unjust repair of modification.
- Failure and breakdown as result of pollution, salt damage, gas damage, unusual voltage or undesignated power (voltage, frequency) as well as disaster beyond control such as fire, earthquake, flood, lightning strike and other natural disaster.
- Abrasion and degradation of consumable parts such as gaskets and O-rings.
- Failure and breakdown during transportation after shipment, for relocation of the installation site or fall.

④ Failure and breakdown of products made to the specification or materials customer-specified are not responsible.

⑤ Irregularities or breakdowns due to chemical or hydrodynamic corrosion by liquid are not covered under the warranty. The material chosen at the time of the contract is only a recommendation. We do not guarantee the chemical resistance of the material.

⑥ Questions arose about the determination of the cause of failure or breakdown are attributed to the negotiation between the customer and us.

⑦ Expenses or other damage incurred as a result of breakdown at the use under the point of use different from the instruction in this manual are not covered under the warranty.

2. Repair

（Notice）

- For repair, consult your supplier or purchase. When returning p umps, thoroughly clean and pack the wet parts kit.

If irregularities are detected during operation, stop the operation immediately and check.
Refer to the section on “9. Troubleshooting”

① For repair, consult your supplier of purchase or us.

② Read this manual again and re-check before requesting repair.

③ The travel expenses are charged for business trip for repair service to remote sites.

④ Inform the followings for requesting repair.

- Model name and serial number
- Used duration and conditions
- Failure parts and conditions
- Used liquid (Name, Specific gravity, Temperature, Slurry contained)

※ Liquid leakage during transportation of the replacement is dangerous. Make sure to clean the inside thoroughly before returning.

※ Refer to the parts list (P8) to check parts name for replacement or maintenance and order with parts number and material.

Install record

Model:	
Date of purchase:	Serial number:
Beginning of use:	Supplier:

Head office: Domestic sales department / Overseas sales department

〒110-0016　3F., 1-1-14 Taito, Taito-ku, Tokyo

Domestic　TEL 03(5818)5130　FAX 03(5818)5131

Overseas　TEL 03(5818)5134　FAX 03(5818)5131

Osaka office

〒550-0002　3F., 1-19-25 Edobori, Nishi-ku, Osaka-shi, Osaka

TEL 06(6467)8565　FAX 06(6467)8566

Nagoya office

〒460-0003　5F., 1-5-27 Nisiki, Naka-ku, Nagoay-shi, Aichi

TEL 052(253)8426　FAX 052(253)8436

Fukuoka officepp

〒812-0011　5F., 2-17-19 Hakata ekimae, Hakata-ku, Fukuoka-shi, Fukuoka

TEL 092(710)6001　FAX 092(710)6125

Tsukuba factory / Service center

〒300-2521　6127-5 Onogo-machi, Joso-shi, Ibaraki

TEL 0297(24)1071　FAX 0297(24)1075

Worchemi Taiwan Co,. Ltd.(Taipei, Taiwan)

NO.915, ZHONGSHAN RD., SHENGANG DIST., TAICHUNG CITY 42955, TAIWAN

台中市神岡區中山路 915 號

TEL 886-4-2562-8358　FAX 886-4-2562-8351

World Chemical USA Inc.(California, U.S.A.)

25691 Atlantic Ocean Dr. Unit B-15 Lake Forest, CA 92630. U.S.A.

TEL 1-949-462-0900　FAX 1-888-860-3364

Suzhou World Technology Co.,Ltd.(Suzhou, China)

61. Fu Yuan Road, Xiang Cheng Economic District, Suzhou, Jiangsu Province, China

江蘇省蘇州市相城経済開発区富元路61号

TEL 86-512-6579-8212　FAX 86-512-6579-8215

World Chemical Co.,Ltd.